XA9848802

PROBLEMS OF HEAT SOURCES MODELING ON STAGE OF ISOLATED POWER SYSTEMS EXPANSION PLANNING

A.V. MALENKOV, L.N. RESHETNIKOVA, Yu.A. SERGEEV
State Scientific Center of the "Institute of Physics and Power Engineering",
Obninsk, Russian Federation

Abstract

It is necessary to use computer codes for evaluation of possible applications and role of nuclear district heating plants in the local self-balancing power and heating systems, which are to be located in the remote isolated and hardly accessible regions in the Far North of Russia. Key factors in determining system configurations and its performances are: (1)interdependency of electricity, heat and fuel supply; (2) long distance between energy consumer centres (from several tens up to some hundred kilometers); and (3) difficulty in export and import of the electricity, especially the fuel in and from neighbouring and remote regions. The problem to challenge is to work out an optimum expansion plan of the local electricity and heat supply system. The ENPEP (ENergy and Power Evaluation Program) software package, which was developed by IAEA together with the USA Argonne National Laboratory, was chosen for this purpose. The Chaun-Bilibino power system (CBPS), an isolated power system in far North-East region of Russia, was selected as the first case of the ENPEP study. ENPEP allows a complex approach in the system expansion optimization planning in the time frame of planning period of up to 30 years. The key ENPEP module, ELECTRIC, considers electricity as the only product. The cogeneration part (heat production) must be considered outside the ELECTRIC model and then the results to be transfered to ELECTRIC. The ENPEP study on the Chaun-Bilibino isolated power system has shown that the modelling of the heat supply sources in ENPEP is not a trivial problem. It is very important and difficult to correctly represent specific features of cogeneration process at the same time.

1. Background

In Russia, from its western border to the Far East regions, a large size Unified Power System (UPS of Russia) is operating. However, UPS of Russia covers only about 40% of the whole territory of the country. This area includes those regions, which are most suitable for the vital activity of population, and therefore are most developed in the aspects of industry, agriculture, demography, etc. The remaining territory of the country is covered by the autonomous power sources and the local isolated power systems (i.e. connected neither to UPS, nor to each other. See Fig. 1). Regions served by the local power systems are primarily those with under-developed or developing economics in the Far North and North-East regions of Russia. The number of autonomous power plants situated in these regions is more than twelve thousand. These plants are mainly small size Diesel power plants (DPP) of only few hundred kW capacity.

The number of power plants, included in the local power systems is about 100. Their power range from 10 to 100 MWe. They produce up to 90% of electricity consumed in the area off the UPS.

If possible application of nuclear power sources in this vast area is considered, it would be natural, first of all, to evaluate the possibility of their inclusion into the local power systems. The power supply objectives should be achieved simultaneously with the heat supply tasks in the area covered by this power system. It is important to note that in the Northern regions the most part of the fuel used for the power engineering needs is consumed for the district heating.

In general, the task of planning of power engineering development is regarded as achieving the required reliability of energy supply with the minimum cost of energy generation, transport and distribution. In order to achieve this goal, it is necessary to consider comprehensively the process of

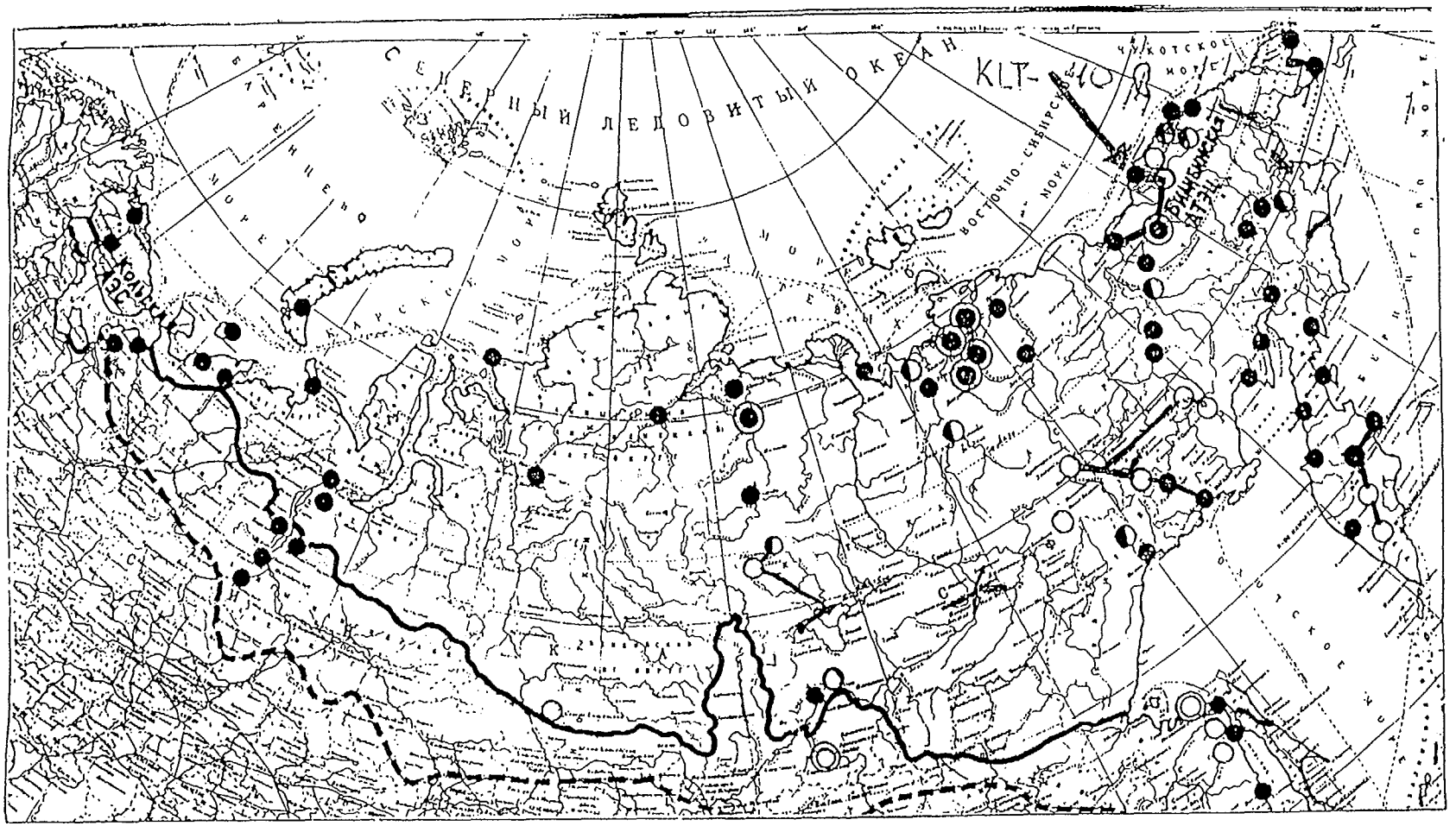

Figure 1. Possible sites of small nuclear power plants construction

- Nuclear cogeneration plants (NCP)
- Single purpose nuclear heating plants (NHP)
- NCP or NHP
- Most probable sites

identification of power system configurations and their performances by means of corresponding choice of respective types, numbers, capacities and operating modes of power units, types of consumed power resources and local, regional and federal level conditions.

It is very difficult or even impossible to satisfactorily realize this approach for the optimized solution without using up-to-date softwares. This is also the case for the consideration of both large size joint power systems and small size local power systems.

2. Choice of tools for study

Development planning of isolated power systems is not a new task, and it has been solved for a long time already. However it was rather difficult to optimize the development plan taking into account the possibilities of joint operation of selected power sources.

This task can be solved using a computer code package ENPEP (ENergy and Power Evaluation Program), which was developed, distributed and supported by the USA Argonne National Laboratory in cooperation with IAEA [1, 2]. The ENPEP software package is one of the integrated tools for power systems expansion planning, consisting of various modules which are shown on Fig. 2. This is a flexible and multifunctional PC-based tool for the optimum power system planning at the federal or regional levels, and for the comprehensive analysis and optimization of the plan.

By now, the ENPEP software package has been used as a tool for the power engineering expansion planning in about 80 countries. It was officially received by Russia in 1992 and adopted by several organizations including IPPE. ENPEP has been used for carrying out several studies.

There are two main models in ENPEP: BALANCE and ELECTRIC. The BALANCE model is used for making forecast studies on the power system and final combined power consumption/production balance under market economy conditions. This model is mainly used for studies and optimization of federal or regional fuel balance.

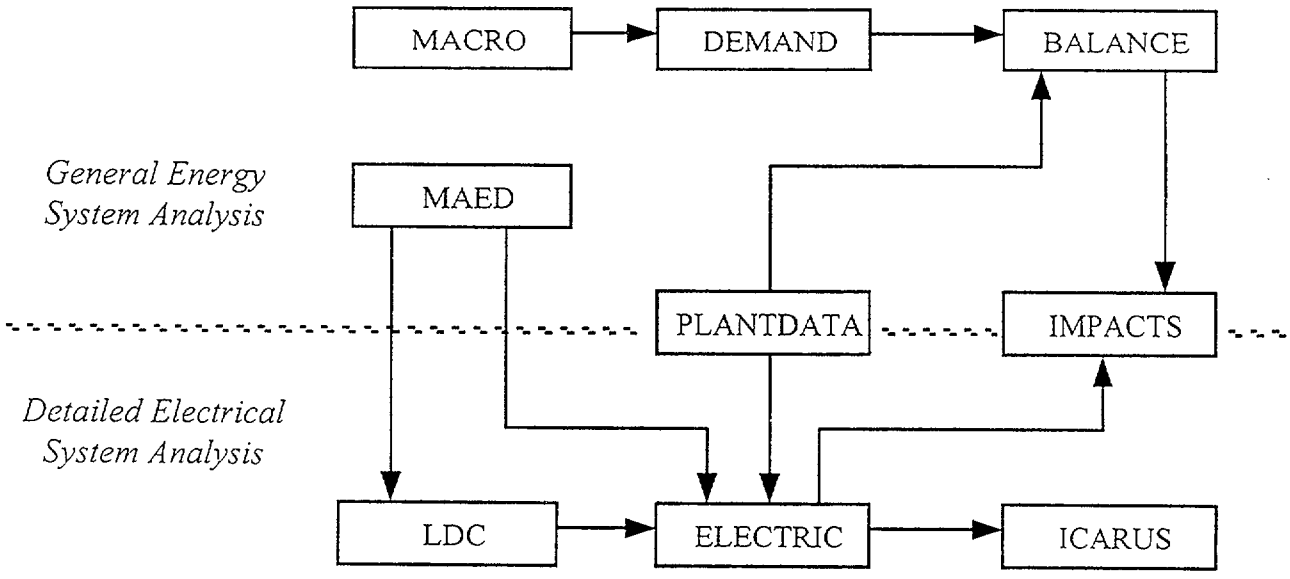

Figure 2. The IAEA ENPEP software package structure

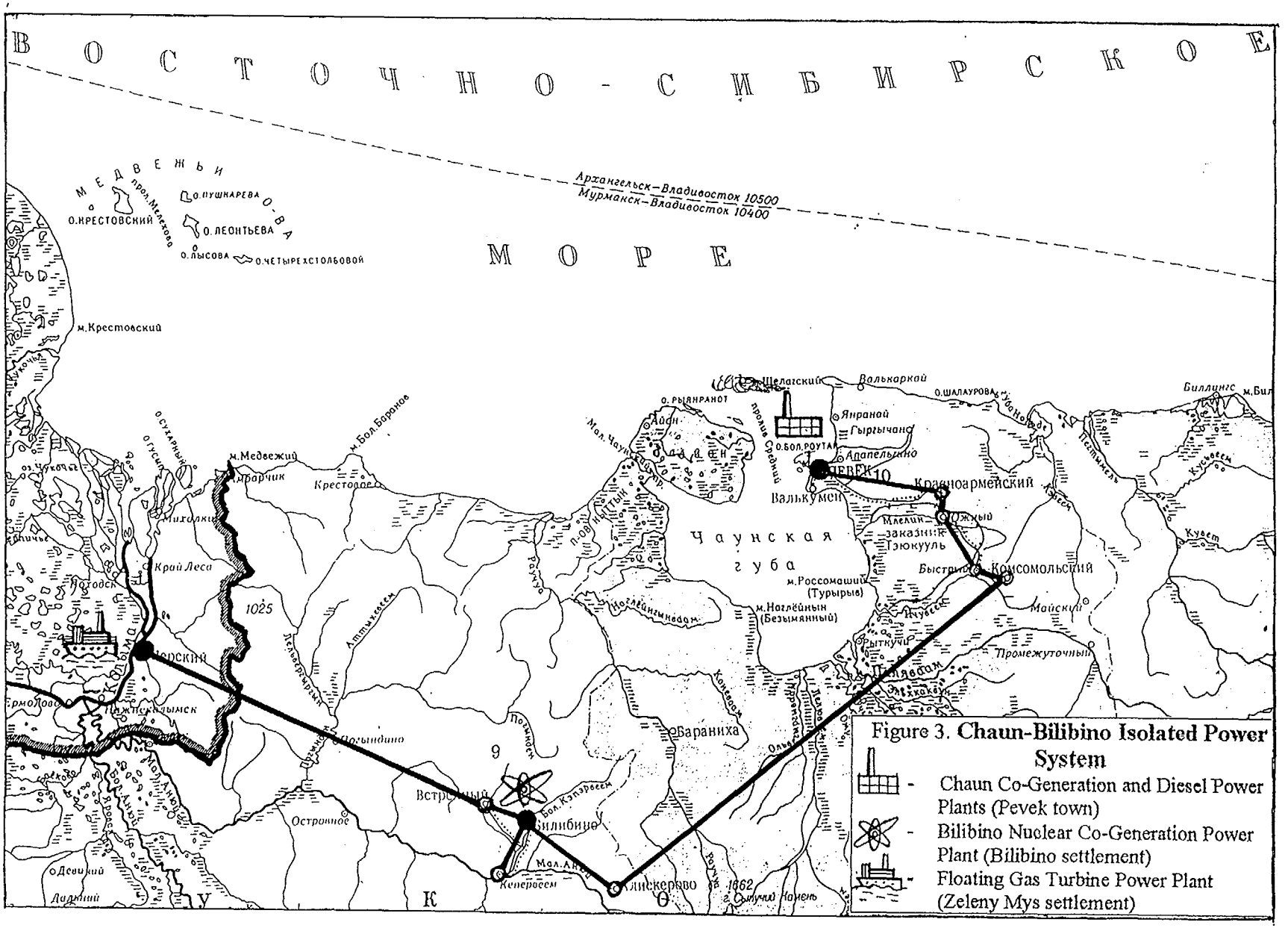

Figure 3. **Chaun-Bilibino Isolated Power System**

- Chaun Co-Generation and Diesel Power Plants (Pevek town)
- Bilibino Nuclear Co-Generation Power Plant (Bilibino settlement)
- Floating Gas Turbine Power Plant (Zeleny Mys settlement)

The ELECTRIC model (PC-based WASP III Plus [3] version) is to be used for working out an optimum plan of electricity generation system expansion (based on minimum of levelized cost criterion), while meeting the demand and reliability requirements.

Service modules of the ENPEP software package can be used for solving specific tasks of planning. For instance, LDC (Load Duration Curve) module is helpful in forecasting load changes in the ENPEP format on the basis of separate data available.

As regards to the task of development planning of isolated systems located in the remote Far North regions, the ELECTRIC model has both advantages and disadvantages. The application of the ELECTRIC model gives the optimum expansion plan of the electricity generating system. This optimum expansion plan would include optimum commissioning schedules of power sources selected from the proposed list of candidates. Minimum levelized costs of the whole power system development, while meeting the demand and reliability requirements for the electricity production system, is the criterion of the optimum plan.

The important advantage of this plan is that it will be worked out taking into account joint operation of the power sources in the system within the evaluated period of planning. This is especially necessary for the power systems which are practically isolated from the other power systems. As a result of such approach, optimized scheduling of power sources into operation is accompanied by the evaluation of energy production, load factor, and fuel demand for each power source in each year of the planning period. The loss of load probability (LOLP) and the system margin are evaluated for the whole power system for each year of the planning period. Thus, the usage of the ELECTRIC model makes it possible not only to work out the optimum plan of the power system development, but also to consider dynamic operation of such system.

However, the ELECTRIC model is capable for simulating a single-product system (electricity production) only, with the concentrated demand at one point, i.e. when the unified power system is considered.

3. Choice of subject of study

The Chaun-Bilibino isolated power system (CBPS) was chosen as a subject of study using the ENPEP software package (Fig. 3). This choice was determined by several considerations: first of all, CBPS is the only multi-unit system in the country when Small Nuclear Power Plants (SNPP), namely Bilibino Nuclear Cogeneration Power Plant (BNCGPP) consisting of four identical power units with 12 MWe are operated as a part of CBPS. The BNCGPP units were commissioned during 1974 - 1976.

TABLE I. Chaun-Bilibino Power System: Existing Power Plants

No	Name	Location	Fuel	Installed Capacity	
				MWe	Gcal/h
1	Bilibino Cogeneration Power Plant	Bilibino	Nuclear	4 x 12	4 x 25
2	Chaun Cogeneration Power Plant	Pevek	Coal	2x4, 1x6, 2x12	~60 (total)
3	Chaun Diesel Power Plant	Pevek	Diesel Fuel	4.5	no
4	"Severnoje Sijanie" Floating Gas Turbine Power Plant	Zeleny Mys (The Kolyma river)	Diesel Fuel	2 x 12	no

CBPS is located in one of the most remote and difficult-to-access regions of north-eastern Russia. Besides BNCGPP, the CBPS includes (see Table I):

- Chaun Cogeneration Power Plant (CGPP) at Pevek, consisting of five power units;
- Chaun Diesel Power Plant (DPP) at Pevek;
- Floating gas turbine power plant "Severnoje Sijanie 01" ("Northern Lights 01"), at Zeleny Mys (Green Cape) settlement on Kolyma river. (See also Table I).

Bilibino NCGPP and Chaun CGPP also supply almost all heat for district heating of the Bilibino settlement (up to 80 Gcal/hour) and the town Pevek (up to 60 Gcal/hours), respectively.

The special urgency of determining the optimum CBPS structure is caused by the fact that by the period from 2000 to 2005 all power sources in the area will exhaust their design life times. It is also important that a floating NCGPP with KLT-40S reactors is considered as one of possible ways of the CBPS expansion. The total operation experience of such a type of reactors installed on the atomic icebreakers and on the lichter-container- carrier "SEVMORPUT" reaches about 150 reactor-years. Now the floating NCGPP design is under development. Its location will be in the vicinity of Pevek. Some design characteristics of NCGPP with reactors KLT-40S and other candidates for inclusion into CBPS are given in Table II.

4. Approaches of Study

4.1. Steps of study

Proceeding from the stated task, the study steps were determined as follows:

- Modeling of the current CBPS status:
  - on the structure and condition of electricity and heat generating units;
  - on the fuel types, their price, amount, means and cost of their transportation to the consumption site;
  - on the amount of produced electricity and heat and its distribution to the consumers.
- Working out of probable scenarios of the demand fluctuations for electricity and heat in the region to be served by CBPS during the evaluated (planning) period of 30 years.
- Development of the data base in the ENPEP format on technical and economic characteristics of the following plants:
  - those included in CBPS at present,
  - candidates for inclusion into CBPS in future.
- Search for CBPS optimal expansion plan during the planning period.
- Sensitivity study of the produced optimum plan with the internal and external factors, which may have the most strong effect on the CBPS structure.

4.2. Modeling of heat supply sources

Some experience on the ELECTRIC module of the ENPEP software package application has already been gained in Russia for the power systems, in which Cogeneration Power Plants (CGPP), producing both heat and electricity, are operated. At the central and north-west Russian power systems which were studied, the shares of electricity generated by CGPPs are 40% and 20% of the total electricity production, respectively[4].

There are several possible approaches to the modeling of power sources generating both heat and electricity, in the calculations using the ELECTRIC module.

The first approach is to set some preliminary schedules of commissioning/decommissioning of CGPPs, thus ruling these CGPPs out of the optimization process. This approach was used in the above mentioned studies [4]. However, it is obvious that this approach is justifiable only when the CGPP share in the total power systems is relatively small.

Another approach consists of two stage iteration. In the first stage iteration, only the electrical part of the power system is optimized. In the second stage, whether the preliminary optimum plan on sizes and locations of the power plants can meet the heat demands for in the region, is evaluated. If the optimum plan does not meet the heat demands, corrections are introduced into the input data, and then the procedure is iterated.

The third approach assumes the heat demand and its production rate to be represented an equivalent amount of electricity.

The main heat consumers in CBPS (Bilibino settlement and Pevek town) are supplied by Bilibino NCGPP and Chaun CGPP. The share of these plants in the total electricity generation in CBPS is nearly 100%. Besides, cogeneration plants only are considered as candidates for entering CBPS (see Table II).

Authors have chosen the third approach to the cogeneration modeling in the ENPEP for solving the task under the CBPS conditions. Thus, in this study the heat supply sources have been modelled by assuming them as an equivalent amount of electricity, i.e. electricity produced from burning the same amount of fuel. The value of installed electric power of CGPP unit is assumed to be equal to that corresponding to the full steam flow rate to the turbine, i.e. the steam extraction from the turbine to the heater of district heating system water is completely stopped. For instance, this value is 16 MWe for BNCGPP, while it is equal to 12 MWe in case of 25 Gcal/hour heat supply rate.

However, it is certain that the representation of all features of heat supply sources in this calculation model is far from being realistic. This is caused by the impracticality of long distance heat transportation. Heat sources are required to be located in the immediate vicinity of the consumers.

TABLE II. Cogeneration Power Plants: Possible Candidates for Expansion of CBPS.

No	Name	Location	Fuel used	Installed Unit Capacity	
				MWe	Gcal/h
1	Bilibino Cogeneration Power Plant Life Time Extension	Bilibino	Nuclear	12	25
2	Bilibino Cogeneration Power Plant - **Second Stage**	Bilibino	Nuclear	40	50
3	Floating Cogeneration Power Plant with KLT-40S reactors	Pevek	Nuclear	2 x 35	2 x 25
4	"Kristall" Floating Cogeneration Power Plant with ABV-6M reactors	Pevek or Zeleny Mys	Nuclear	2 x 12	2 x 25
5	New Chaun Cogeneration Power Plant	Pevek	Coal	25	25

5. Results of studies

The load duration curve (LDC) module of the ENPEP code was used to forecast the CBPS electric load for the period of up to 2025 taking into account the additional load equivalent to the heat production. The obtained LDC were then provided to the ELECTRIC module as Fourier coefficients.

As a result of the ELECTRIC module operation, the CBPS expansion plan was optimized on the levelized cost criterion. The optimal plan included:

- The floating NCGPP with two KLT-40S reactors, the largest of proposed candidates, intended for the base electric load operating mode.
- Two coal fired CGPP units (25 MWe + 25 Gcal/hour), intended for the semi-peak or peak loads.

Sensitivity analyses have shown that the floating NCGPP with KLT-40S can be used as a stable electricity generating source for the base load under any changes of input parameters. Only the types and their numbers of power sources involved for the semi-peak and peak loads can be subject to adjust. These power sources for the "semi-peak and peak mixture" may include the following power units:

- One to three coal fired CGPP units (25 MWe + 25 Gcal/hour).
- A Floating NCGPP "Crystal" (2 x 12 MWe + 2 x 25 Gcal/hour).
- Life time extension of one or more power units of the existing Bilibino NCGPP after their design life time expiration.

Results of sensitivity analysis were not affected by some artificial input modifications assumed by the authors in order to simulate the heat supply features of the CBPS region. The results have shown that the methodological approach applied by the authors for modelling the typical cogeneration systems is not capable of adequately modelling the real CBPS power systems. For instance, none of CBPS expansion plans produced by this method could meet the heat supply requirements in the region.

Thus, the current ENPEP package can not give adequate pictures of cogeneration power plant systems for planning the expansion of isolated power systems on the Far North of Russia. Therefore, the issue of planning such system expansion under the condition of joint operation of different power sources is still open. In the authors' opinion, there are two possible ways in this direction. One is to develop a new tool. The other is to modify the existing modules of the ENPEP package. The experience gained with ENPEP could be used for the code validation.

6. Conclusion

Study on the optimum power system expansion planning for the Chaun-Bilibino isolated power system was performed in the framework of computation capabilities of the ELECTRIC module of the ENPEP software package. This required modeling of generation and consumption of electricity and heat. The common power system model, in which the distribution of power sources and consumers over the territory is not considered, was used for the study. This approach makes it possible to take into account to considerable degree the fuel consumption under cogeneration conditions, while the real controlling features of heat supply sources by the heat consumer locations can not be considered.

Also, it turned out to be impossible to increase the number of heat source candidates of the single purpose heat generating plants, such as nuclear district heating plants or fossil fueled boilers into the power system modelling.

The main conclusion from the above study is that the use of the ENPEP software package (ELECTRIC module) for optimization of electricity and heat supply systems offers rather limited possibilities. Additional means in the calculation model will be required for adequate representation of heat generation plants, and therefore, their role in such power systems.

REFERENCES

[1] Bruce P. Hamilton, Richard R. Cirillo and William A. Buehring. ENPEP: An Integrated Approach to Energy Planning. Paper Presented at the International Symposium on Energy, Environment and Information Management. Argonne National Laboratory, Argonne, Illinois, U.S.A., Sept.15-18, 1992.

[2] Energy and Power Evaluation Program (ENPEP). User's Manual. Argonne National Laboratory, Argonne, Illinois, U.S.A., 1992.

[3] Wien Automatic System Planning (WASP) Package. Version WASP-III Plus User's Manual (IAEA/CMS/08), Vienna, Austria, 1995

[4] Yu. Chernilin, S. Kononov, E. Zakharova, V. Kagramanian, A. Malenkov. Development of the Regional Capacity Expansion Plan in Russia: Application of the WASP Model. (IAEA-SM-338/85P) In: "Electricity, health and the environment: comparative assessment in support of decision making". Proceedings of an International Symposium, Vienna, 16-19 Oct. 1995, p. 739-762.

NEXT PAGE(S) left BLANK